Independent receive for the DB6NT MKU23G2

Dave Robinson G4FRE

I have owned a DB6NT MKU 23G2, built as a kit for many years now and have been satisfied with its overall performance. Having recently acquired a GR1236 noise meter and an SDRIQ I needed to investigate extracting a 144MHz receive only signal to drive a 144/28MHz converter to use these units without needing a “parallel” 2304/28MHz receive converter. Initial examination revealed that a signal could be tapped off from the slider of the RX gain pot. A small terminal pin was inserted alongside the pot and a 1nf chip capacitor connected to it on the track side of the board. A short piece of RG174 on the ground plane side of the board was connected to an SMC connector on the side of the box. The opportunity was also taken to fit an SMA connector on the sidewall near the crystal to allow for future external 120MHz oscillator input

The 1W 144MHz driver (the maximum drive level found not to destroy the PIN diodes was hooked up to the common IF port and the 144MHz level measured at the SMC connector. The level was –12dBm which could cause damage to anything connected to the port. Thoughts were initially given to adding extra pin diodes to increase the isolation, but there was little space and no suitable pin diodes could be found. I then came across a PCB RF relay Omron type G4Y-152P that was intended to have high isolation at 900MHz. This was glued upside down to the chassis. The normally open connection was terminated with a 50 ohm chip resistor. The normally closed connection was connected to the SMC connector on the transverter. The common connection was connected to an RF connector mounted on the back of the chassis to allow connection to the external equipment. The coil was activated on transmit, thereby terminating the independent receiver port in 50 ohms on transmit. The 144MHz level at this point was now –75dBm, an acceptable level for the external equipment
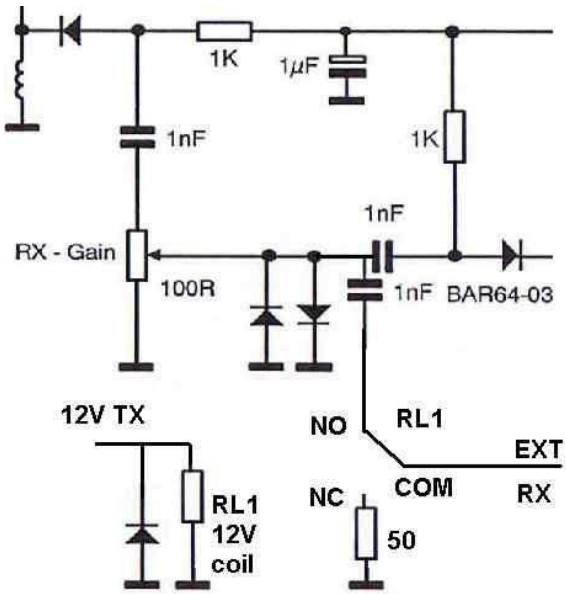
The following shows the circuit and the finished view of the modifications. The relay is in the bottom right hand corner.